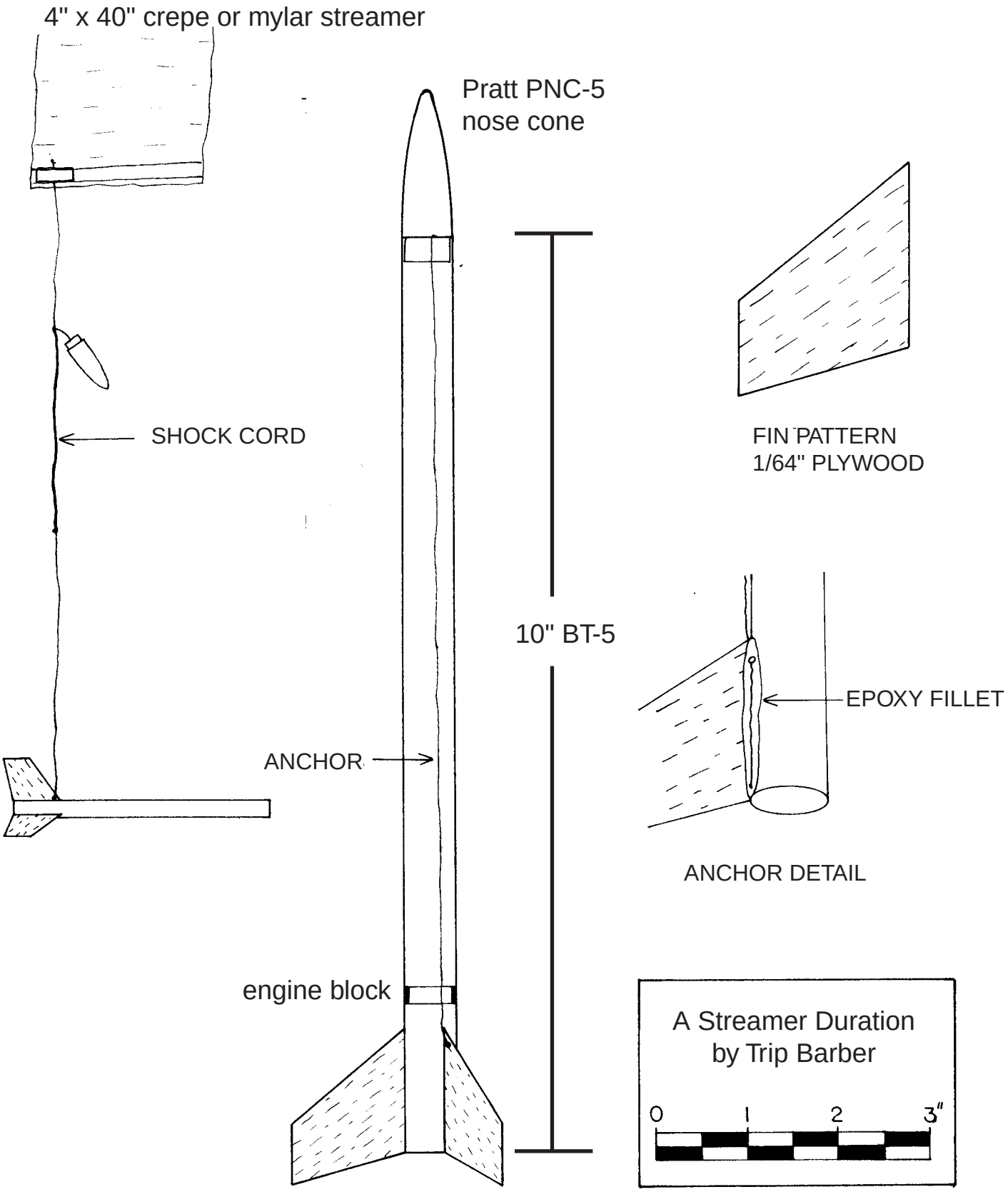

Copyright 1978, 2002, National Association of Rocketry
Permission is granted to make limited personal copies for the purpose of building this model rocket.